RAH

NPL Report DES 129

Guidance on Eliminating Interference from Sensitive Electrical Circuits

B P Kibble and I A Robinson
Division of Electrical Science
National Physical Laboratory
Teddington
Middlesex, UK, TW11 OLW

ABSTRACT

Electrical interference must be eliminated from circuits in order that their sensitivities can approach the fundamental Johnson noise limit. Moreover, semiconductor devices in measuring instruments are prone to rectify interference and thereby produce systematic errors.

This report presents the basic principles underlying interference elimination. A thorough understanding of these principles together with the persistence needed to apply them to complex situations is the best way to ensure success.

© Crown Copyright 1993

ISSN 0143-7305

National Physical Laboratory
Teddington, Middlesex, UK, TW11 0LW

No extracts from report may be produced without the prior written consent of the Chief Executive, National Physical Laboratory; the source must be acknowledged.

Approved on behalf of Chief Executive, NPL,
by Dr T G Blaney, Head, Division of Electrical Science

CONTENTS

ABSTRACT

1 INTRODUCTION 1

2 FUNDAMENTAL PRINCIPLES 2

2.1 CURRENTS AND FIELDS 2
2.1.1 The Superposition Theorem 2
2.1.2 The Reciprocity Principle 3
2.2 THE THREE MODES OF INTERACTION BETWEEN MEASURING AND INTERFERING CIRCUITS AND THEIR ELIMINATION 3
2.2.1 Common Conductor Coupling 3
2.2.2 Capacitative Coupling via Electric Fields 4
2.2.3 Inductive Coupling via Magnetic Fields 6
2.2.4 Wiring to eliminate these interactive modes - coaxial or shielded, twisted-pair conductors 6
2.2.5 Vector addition of coherent interference - e.g. via the mains . . . 10
2.2.6 Application of the fore-going to operational amplifier circuits . . . 11
2.2.7 Inter-circuit capacitances on a printed circuit board 14
2.2.8 Useful diagnostic equipment 15

3 PRACTICAL CONSIDERATIONS 18

THE PRINCIPLE OF AN ISOLATING ENCLOSURE WITH FILTERED OUTPUTS 18
THE AVAILABLE METHODS FOR ISOLATING OUTPUTS 23
3.2.1 Optical isolators 23
3.2.2 Optical fibre data links 23
3.2.3 Amplifiers to obtain the effect of isolation where a single-conductor connection carrying negligible current is permissible 24
3.2.4 Isolation amplifiers where no direct conducting connection is permissible 25
3.2.5 Supplying power to isolated circuits 25
3.2.6 Current equalisation 26
3.2.7 Why 'earth loops' are bad, and what to do about them 27
3.2.8 A 'worked example' - using a phase-sensitive detector 28
MINIMISING THE EFFECTS OF USING INCORRECTLY-DESIGNED COMMERCIAL INSTRUMENTS 31

4 FINAL REMARKS . 32

4.1 NON-ELECTRICAL INTERACTIONS 32
4.1.1 Thermoelectric emfs 32
4.1.2 Charged particles (cosmic rays etc) 33
4.2 IT'S ALL A MATTER OF TOPOLOGY 33
4.2.1 Look out for unwanted connections 33
4.2.2 Finally, think where the currents are circulating 33

List of figures with their legends

1 Common-conductor coupling.
2 Eliminating common-conductor coupling.
3 Coupling via two capacitances.
4 Coupling via one capacitance and a conductor.
5 The use of a screen to eliminate capacitative coupling.
6 Inductive (magnetic) coupling.
7 The magnetic field surrounding a coaxial cable.
8 The magnetic field surrounding a twisted-pair cable.
9 Star interconnection of the shields of twisted-pair cables.
10 Vector addition of single-frequency interfering voltages.
11 An unsymmetrical operational amplifier circuit.
12 Detail of the currents flowing in the circuit of figure 11.
13 The currents in a two-stage operation amplifier circuit with occurrences of common-conductor coupling indicated by braces.
14 Elimination of common-conductor coupling from the circuit of figure 13 by reconfiguring the conductors.
15 Capacitances between conductors on a printed-circuit board.
16 A 'ground plane' on the reverse side of a printed-circuit board.
17 A differential-input preamplifier.
18 A 'wrap-around' current probe.
19 A pick-up coil for detecting magnetically-coupled interference.
20 An isolating enclosure with a filtered output.
21 A totally isolated mains-energised power supply.
22 A way of constructing a transformer for a totally-isolated supply.
23 A typical commercial instrument as a noise source.
A,B Noise sources within the instrument.
C Capacitative coupling of noise generated within the instrument via an imperfectly-bonded metal case panel, or through a plastic insulating case.
D Magnetic coupling of mains-borne noise emitted by the mains transformer. (Higher frequencies of several kHz are emitted by switched-mode power supplies.)
E Capacitative coupling to the mains transformer.
F,G Capacitative coupling between the digital and analogue circuitry.
24 Isolating a noisy instrument.
25 An isolation amplifier where one direct connection is permissible.
26 A high-permeability (usually toroidal) transformer core used as a current equaliser.
27 A loop in the shields of a circuit of twisted-pair conductors.
28 Eliminating false signals from the input of a phase-sensitive detector.

1 INTRODUCTION

This report is the latest of many attempts by one of the authors to present the simple fundamental principles of eliminating interference from measuring circuits in a clear, logical manner. It is for the reader to judge to what extent this aim has been accomplished. Your comments would be especially welcome to help guide further attempts to expound this subject, which is becoming ever more vital in a world of increasing electrical pollution.

It is important to be clear at the outset that interference elimination is amenable to a logical approach, and is most certainly not a "black art". To this end, it may well be necessary to first discard imprecise and often incorrect notions of 'earthing' and 'shielding' before any real progress can be made. But we can assure you from our own experience that the rewards of applying correct, simple principles to produce clean, problem-free electrical measurements are very great, and we hope that this report will help.

Eliminating all possible sources of extraneous interference is vital for the successful performance of sensitive analogue electrical measurements. If interference is present, not only is the resolution of the measurement impaired through degradation of the signal-to-noise ratio, but rectification of the interference by any of the myriad semiconductor rectifying junctions in electronic signal detectors may well result in systematic error. The ideal, to be attained as closely as possible, is to <u>isolate</u> the low-level circuitry. By this we mean that it should be self-sufficient in its own small bounded universe and be constructed in such a way that its response to any external interfering signal is negligible. Interfering signals are usually, but not invariably, conveyed electrically - the effects of acoustically induced interference for example, can be both appreciable and subtle. This report is mainly concerned with electrical interference, whose elimination depends on applying a very few elementary principles of circuit-coupling. Some persistence is often necessary in real, complicated situations, but the authors have found this approach much more satisfactory than consulting any one of a number of lengthy works on the subject. These often make a simple matter unnecessarily complicated and therefore encourage adoption of ad hoc unsatisfactory partial solutions.

Another cause of conceptual difficulty is that most diagnostic equipment for examining the state of electrical circuits measures potential differences between circuit nodes. It is therefore easy to lose sight of the fact that these potential differences are merely manifestations of circulating currents. For interference elimination it is often more profitable to focus attention on the currents and the magnetic and electric fields associated with them.

When the necessary isolation has been accomplished, there remains the conveying of the analogue information gained by the low-level circuitry to the region outside its boundary, either in analogue form, or more commonly and satisfactorily these days, in digital form, without destroying the integrity of the isolation. We discuss the principal ways of accomplishing this.

Once in high-level analogue or in digital form, the information will be reasonably safe from further significant corruption by interference. This is particularly true for on/off pulsed digital information, on which interference below a certain maximum level has no effect whatsoever. The information can then be safely further processed by analogue circuitry or by computers.

2 FUNDAMENTAL PRINCIPLES

2.1 CURRENTS AND FIELDS

It is helpful to visualise the circulating currents and the magnetic fields to which they give rise, and the electrical potentials of conductors and the electric fields emanating from them, as the physically real entities. It is in many ways unfortunate that the vast majority of electrical test and measuring instruments (for example, voltmeters, oscilloscopes and spectrum analysers) are regarded as responding to an input voltage, and these are what is used to explore conditions in a circuit. It is easy to forget that the voltages recorded are only manifestations of currents flowing through impedances in their circulating paths. It is important to bear in mind at all times the elementary, but crucial, principle that:-

CURRENTS FLOW AROUND COMPLETE CIRCUITS.

They can be envisaged as starting out from a source - a battery, power supply, signal generator, an emf generated between the ends of a conductor in which another current is circulating, or whatever, - but having traversed a possibly very complicated network of conductors and impedances, they must return in their entirety to that source. Do not permit yourself to think that they go to 'ground' or 'earth' and disappear!

It follows that the actual conductors which are represented by ⏚ symbols have flowing in them currents returning to their source. Therefore, unless they are superconductors and the current is DC, they cannot be at the same potential. This can most certainly matter in sensitive circuits. The actual return conductors, and the precise points at which they are interconnected should be drawn and considered together with the currents flowing in them. Particular care should be taken to represent the topology of the connections of the actual circuit correctly. We return to this matter in discussing common-conductor coupling in section 2.2.1.

We have found it helpful also to replace the words 'earth' or 'ground' in our vocabulary with more specific terms such as 'current return conductor', 'instrument case', 'mains (green/yellow) safety wire' etc. as appropriate, and to designate a particular node of a network as a potential reference point to which all voltages are understood to be referred. The time spent in thinking in this more precise way will be amply repaid, particularly in eliminating common-conductor couplings.

2.1.1 The Superposition Theorem

In a network of linear circuit elements - for example, impedances, sub-circuits and sources - in which the current traversing them is proportional to the voltage across them, the current arising from each individual source behaves as if no other currents were present.

This theorem, properly appreciated and applied, is an extremely powerful and useful mental tool as it permits the untangling of many complex situations. It should be borne in mind at all times when considering interference elimination.

2.1.2 The Reciprocity Principle

This principle, which is deeply embedded in electromagnetic theory, can be illustrated in its most naive form by noting that if the positions of source and detector are interchanged in a balanced Wheatstone's bridge network the detector will remain nulled. A more sophisticated illustration is that the directional radiation pattern of a transmitting antenna is identical with the receiving pattern of the same antenna used as an aerial. For our purposes here, we note that it is often easier to visualise how a circuit will propagate interference than to visualise how the same circuit will respond to external interference. In designing an interference-free circuit therefore, it is a most useful technique to consider the circuit as an interference generator and to so arrange its topology an geometrical layout as to minimise its interference propagation.

THE THREE MODES OF INTERACTION BETWEEN MEASURING AND INTERFERING CIRCUITS AND THEIR ELIMINATION

Common Conductor Coupling

This is the only coupling mode which applies to DC as well as to AC signals.

Two circuits may share a conducting path of impedance Z, as shown in figure 1. The potential difference IZ arising from the current I flowing around one circuit can be thought of as a low impedance 'source' which drives unwanted current around the other circuit.

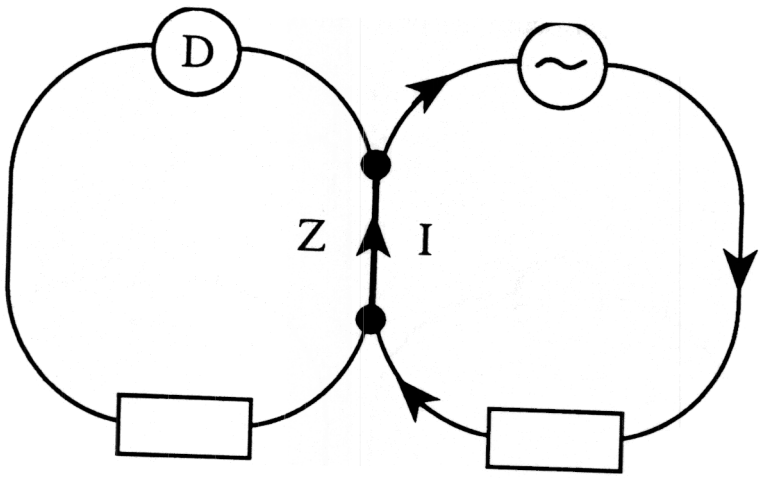

Figure 1 Common-conductor coupling

To eliminate this coupling mode, rearrange the circuit to have only star connections, as in figure 2.

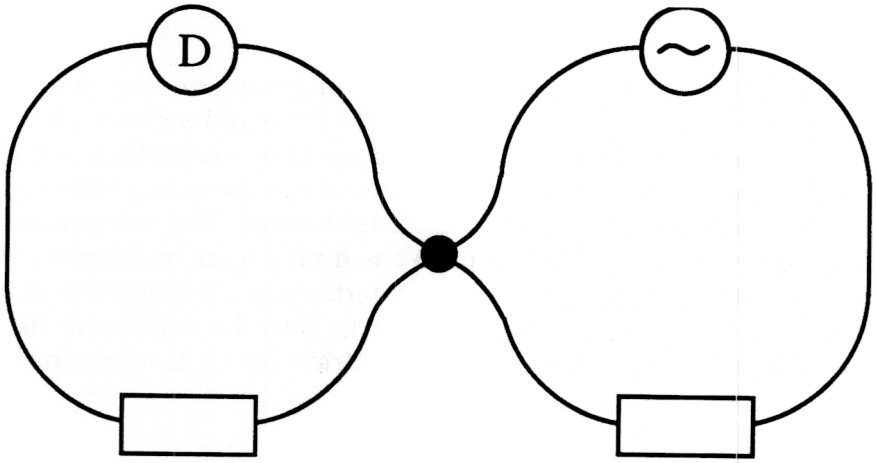

Figure 2 Eliminating common-conductor coupling

2.2.2 Capacitative Coupling via Electric Fields

This AC coupling mode has most effect on high-impedance circuits.

An interfering current flows through the capacitance and around parts of the interfering and measuring circuits in series, as illustrated in figure 3. Note that there must be either two capacitances between different parts of the circuits, or, more usually, a capacitance and another connection via a conductor, as shown in figure 4.

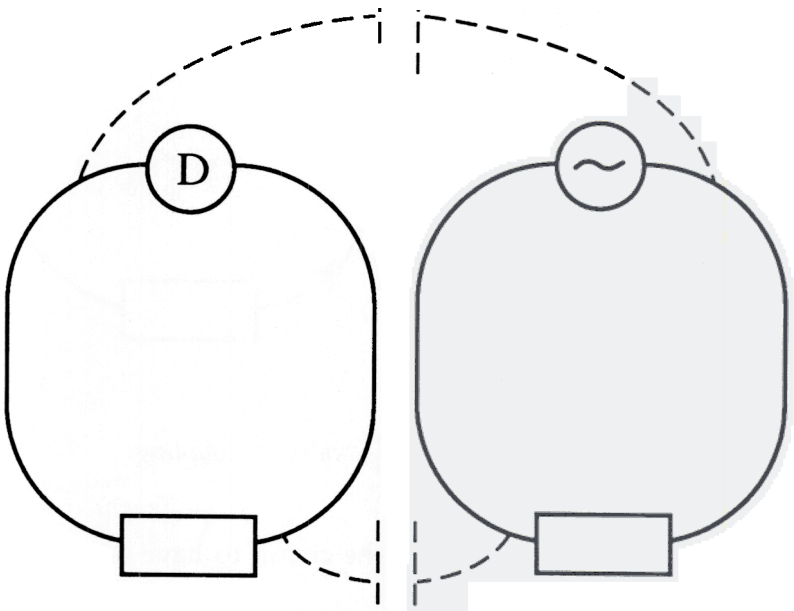

Figure 3 Coupling via two capacitances

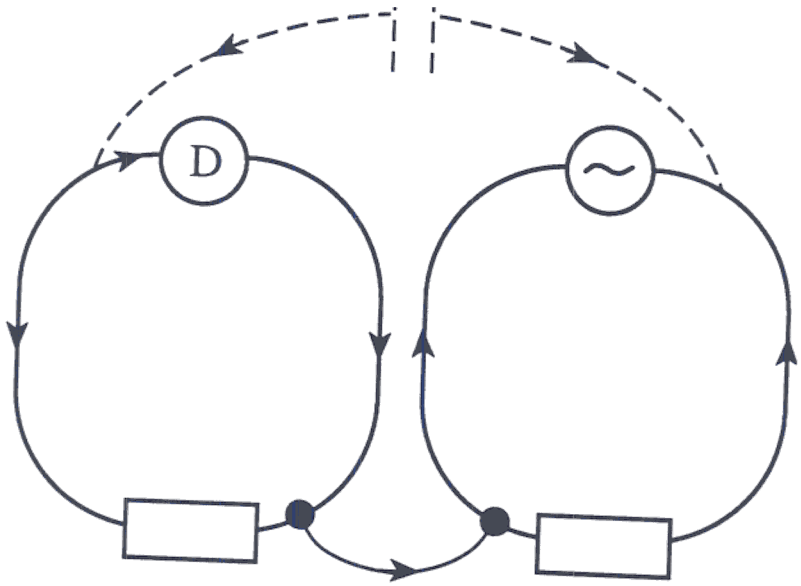

Figure 4 Coupling via one capacitance and a conductor

Capacitative coupling can be eliminated by using shielding, that is conducting surfaces connected to appropriate points to intercept the capacitative current and confine it to the interfering circuit, as shown in figure 5, or prevent it flowing in sensitive parts of the measurement circuit.

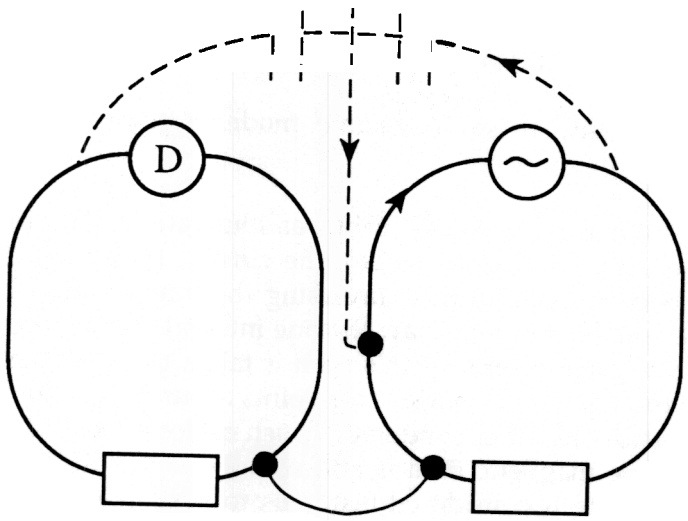

Figure 5 The use of a screen to eliminate capacitative coupling

Subtle causes of capacitative interaction occur in practice. For example, the panels of an instrument case may be prevented from being connected to each other by paint or by deliberate or age-induced anodising. Capacitance from outside sources to the case panels will be in series with capacitance from the panel to various parts of the interior circuitry. Capacitative currents can also be led to the interior of the case via protruding controls, switches and indicators if these are not connected to the case in some way.

Inductive Coupling via Magnetic Fields

This AC coupling mode has most effect on low-impedance circuits.

A proportion of a magnetic field generated by the interfering circuit may thread the measuring circuit, as illustrated in figure 6, resulting in mutual inductive coupling between them. Reduction of this coupling depends upon arranging the conductors of either the interfering, or the measuring network, or preferably both, in such a way that each and every return current path is routed adjacent to the corresponding outward current path as shown in figure 7 by using either twisted or coaxial conductor-pairs (see the next section).

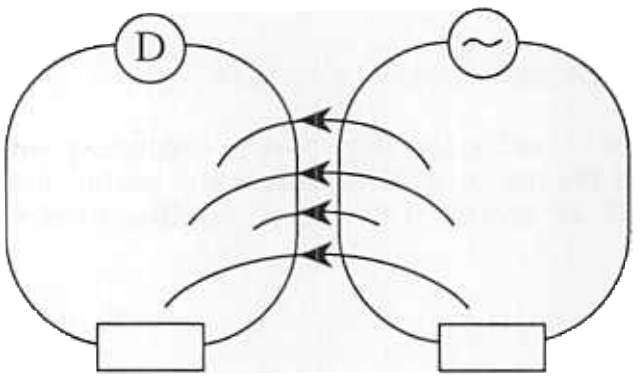

Figure 6 Inductive (magnetic) coupling

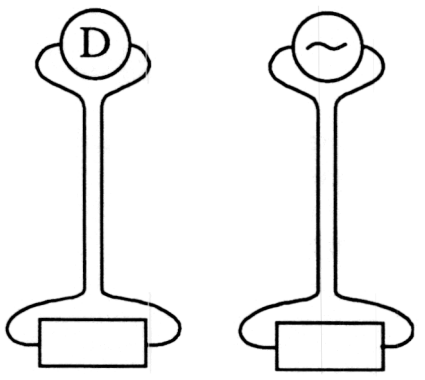

Figure 7 Eliminating inductive coupling

Wiring to eliminate these interactive modes - coaxial or shielded, twisted-pair conductors

Consider a portion of a straight coaxial cable, as illustrated in figure 8. Suppose by some technique (discussed later in section 3.2.6), the current traversing the outer conductor is made to be equal and opposite to that traversing the inner. Since the total current in the cable as a whole is zero, by Ampere's law the line integral of magnetic field around a closed path threaded by the cable is zero. If this path is taken to be circular with the cable as its axis, by symmetry the field is the same at all points around the path and must therefore be zero at all points outside the outer conductor. Such cables are of course not used in straight infinite lengths, but the magnetic field is still usually negligibly small if a finite length of conductor bent into an arc is considered instead, provided the length and radius of the arc are large compared with the diameter of the cable - a condition automatically ensured by its mechanical stiffness.

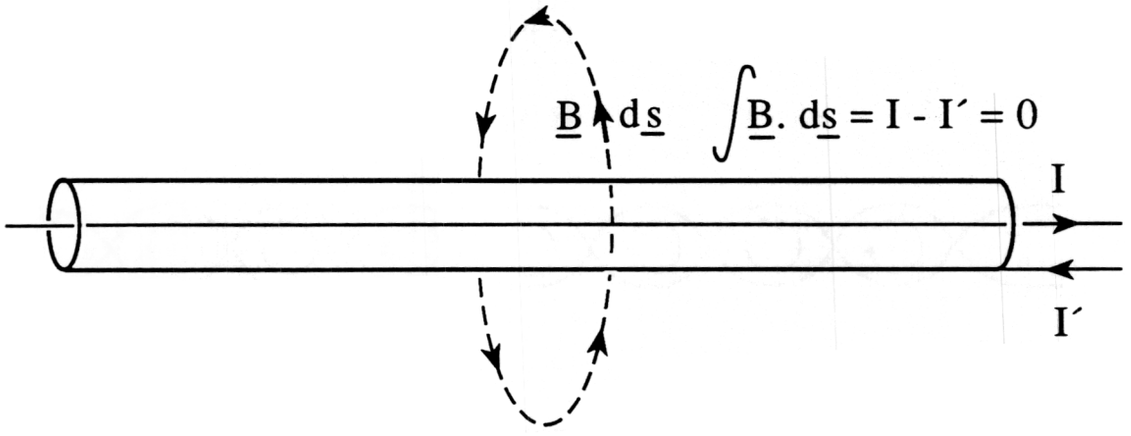

Figure 8 The magnetic field surrounding a coaxial cable

In a network of instruments interconnected by such cables, the outer conductors should be electrically continuous, without any appreciable impedance in their circuits. Therefore, despite the currents flowing in them, they form a near-equipotential surface, and the electric field outside the cables is also negligibly small.

We now have a system of conductors outside which there is no appreciable electromagnetic field. That is, it cannot radiate interference. Therefore, by the reciprocity theorem expounded in 2.1.2, it cannot respond to outside interference, and we have a completely interference-free system. In order to eliminate interference from DC networks, they should also be constructed according to these principles.

The problem with this method of inter-instrument wiring is how to ensure the equality of inner and outer currents which makes the cables coaxial, in an electrical sense. This happens automatically at radio and higher frequencies because the characteristic cable impedance is usually lower than that of free space. At low frequencies the impedance outside the cable must be enhanced by the current equalisers described in section 3.2.6 provided that the impedance of the circuit of one of the conductors, usually the outer, is low. Even this technique fails for very low frequencies and for DC, unfortunately.

Coaxial cables are therefore useful for eliminating interference from audio and higher frequency measuring circuits. For measuring circuits working at lower frequencies or DC, the alternative cable topology of shielded, twisted conductor-pairs may be used instead. Consider figure 9 and suppose the tightly and uniformly twisted conductors carry equal go and return currents. At a small distance from these conductors, the magnetic field from each of them tends to cancel, and at distances greater than the twist length this cancellation is further enhanced by the opposite directions of the remanent field produced by successive twists. The magnetic field here is as small as that produced by a coaxial cable. The electric field is dealt with by surrounding the twisted conductors by a continuous shielding foil or woven mesh, but the interconnection of these shields must be arranged differently from the coaxial case. The shield of each cable ought to be connected to the rest, using single conductor extensions if necessary, without any loops, as illustrated in figure 10. In practice, many of the shield connections will be made directly to the outer shielding case of an

instrument. The shield should be connected to the twisted-pair circuitry at almost one point, and capacitative currents from the shield to the twisted-pair circuit should be considered.

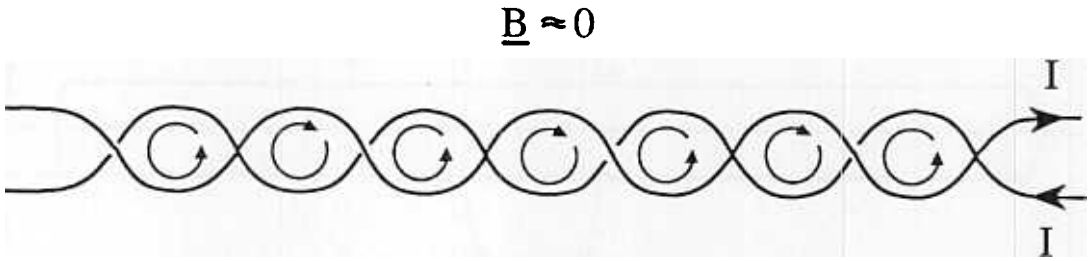

Figure 9 The magnetic field surrounding a twisted-pair cable

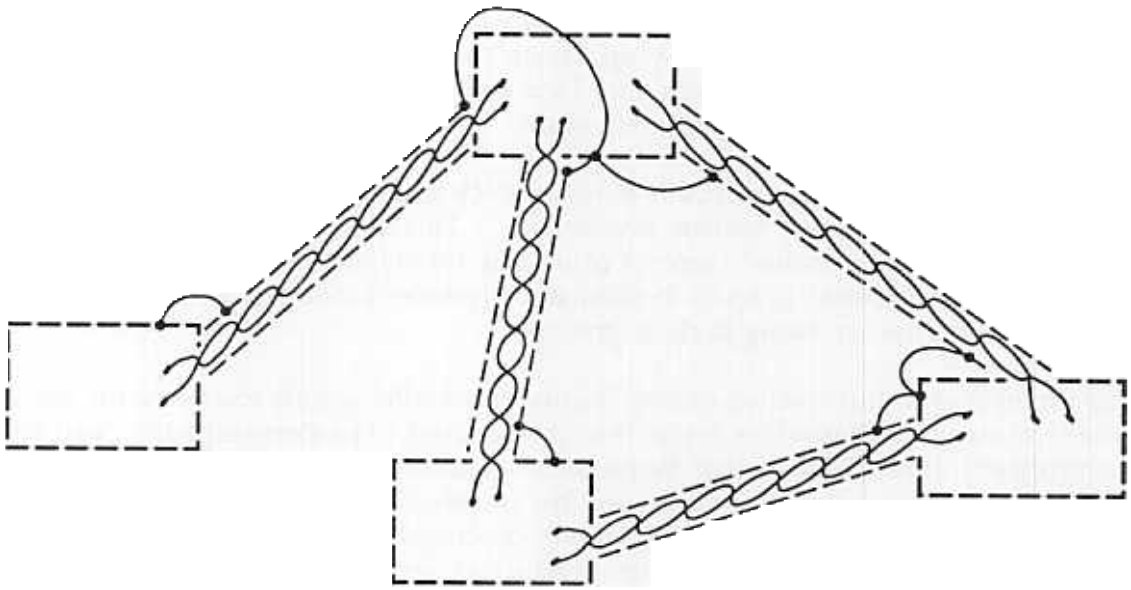

Figure 10 Interconnection of the shields of twisted-pair cables

We emphasise again the point that the 'go' and 'return' currents of a pair must be constrained to be equal for all current values - adjusted equality for one current value only will not ensure the circuit is immune to interference. Equality is automatic for a twisted-pair going only to an isolated instrument, as on the left of figure 9, but measures such as symmetrical loads or using a current equaliser must be used for loop circuits, as on the right.

If the circuit design cannot meet the requirement that the circuit of one of the conductors of the pair is of small impedance, so that the above current equalisation technique cannot be used, recourse must be had either to the concept of isolation or of balancing. Isolation is

attained by breaking the circuit loop of a conductor-pair; the analogue or digital information is conveyed across the break. Ways of doing this are described in section 3. Balancing is illustrated in figure 11.

The desired information is sent down a symmetrical conductor-pair by generators A and B of equal amplitude and the same phase and output impedance, and is registered by detectors D_1 and D_2 of equal sensitivity and input impedance. The outputs of these detectors are subtractively combined by a third detector.

The symmetry of the system ensures that any flux $\underline{B}$ threading the loop formed by a conductor which conveys any residual imbalance current back to the sources causes equal interference voltages to be registered by D_1 and D_2. Therefore the result is not registered by D. Any capacitative-interference, as suggested by the interfering source C and conveyed via a conducting surface which is symmetrically disposed with respect to the conductor-pair, will also be balanced out.

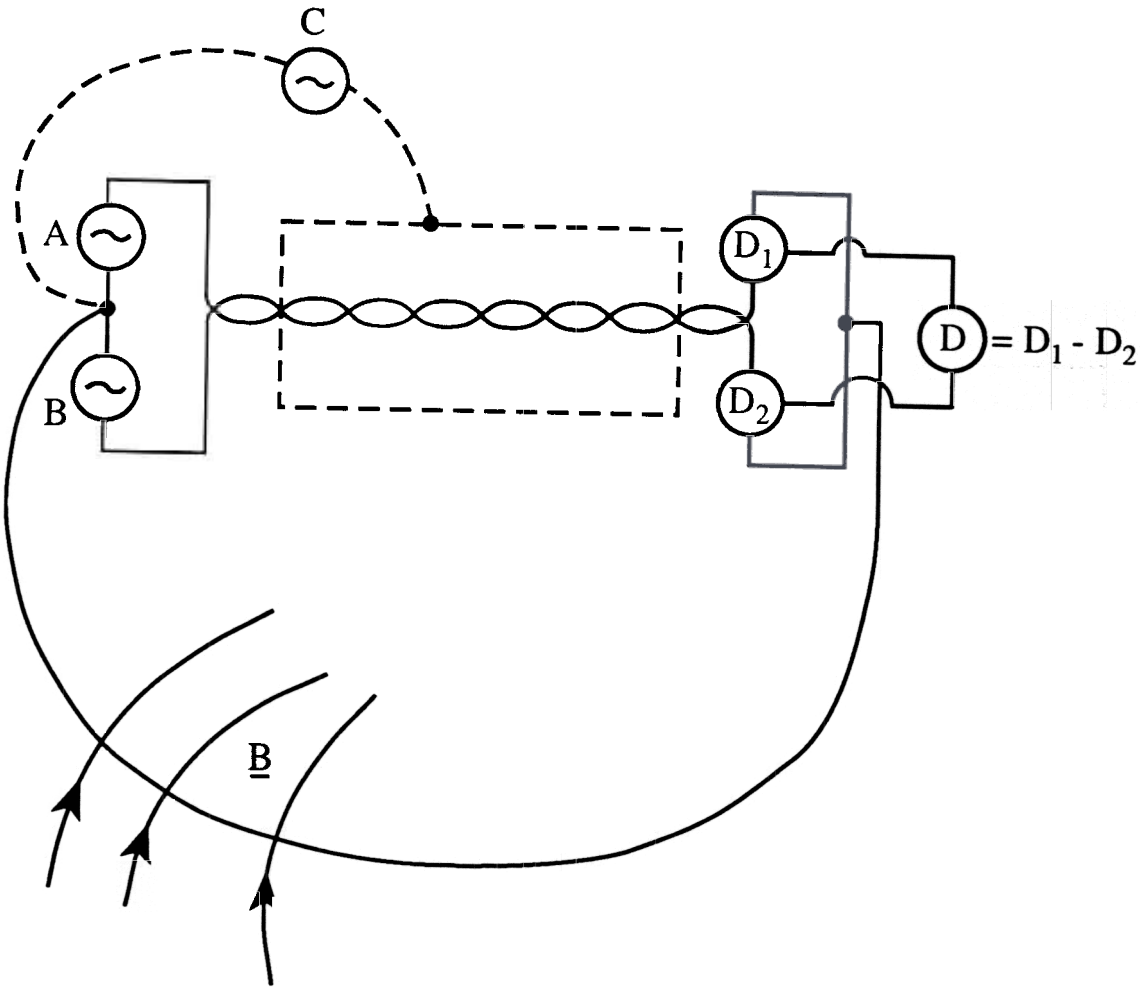

Figure 11 Balancing a conductor-pair circuit

2.2.5 Vector addition of coherent interference - e.g. via the mains

As we have noted in the introduction, the whole subject of interference elimination is often viewed as something of a black art, with piecemeal 'cures' such as ferrite beads or mains interference filters being proposed on a trial-and-error basis. One cause of the adoption of this straw-grasping approach lies in the vector addition of induced voltages A,B,C, etc. emanating from one common source. The commonest situation of this kind is the reception of mains and mains-borne interference. This enters a measurement circuit by various routes, each route having a different magnitude and phase associated with it. The situation is illustrated in the phase diagram of figure 12.

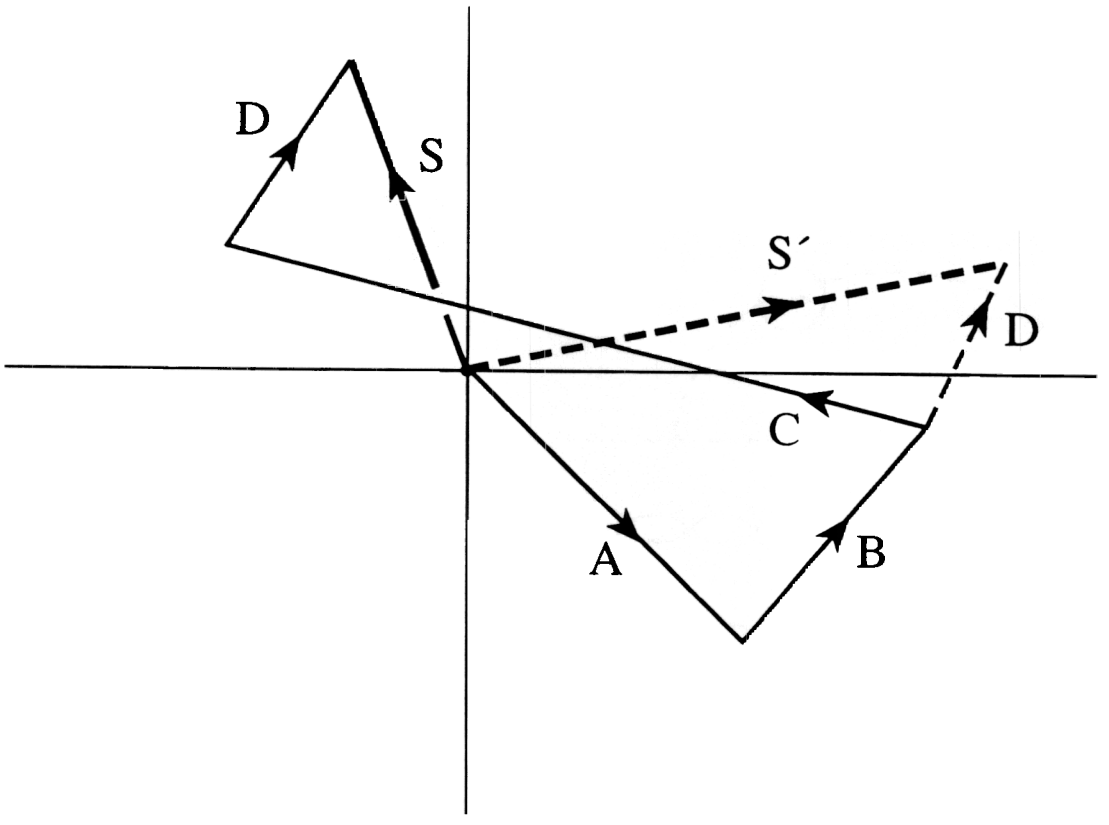

Figure 12 Vector addition of single-frequency interfering voltages

These voltages sum to a final voltage S, as observed between two points of the measuring circuit by some test instrument - oscilloscope, voltmeter etc. Very likely, as a further diabolical twist, some additional voltage components will arise from the loops added to the network by the very act of connecting such an observing instrument.

Suppose now that one suspected cause of entry of the interference is identified and removed so that one of the contributing voltage vectors, say C, is eliminated. The remaining vectors, represented by the broken lines, then sum to give a new resultant S′, which will very possibly have a greater magnitude than S. There is now a tendency to think that the action taken to eliminate C was incorrect, to restore the status quo, and try some other remedy at random instead.

Clearly, in these circumstances, there is no substitute for acting on sound basic principles and having the courage of one's convictions to take the necessary remedial steps, even though some appear to make the total observed interference greater. When all causes are dealt with, in an ideal world, the interference will disappear totally. To stop short of this ideal is to court disaster, because a small resultant can be obtained by the accidental partial cancellation of many large contributions. The result may well then be only temporarily satisfactory, because any change in the circuit layout, the nature of the interference, etc. can alter the magnitude or phase of one or more of the remaining vectors and bring back the problem, probably unsuspectedly.

One crumb of comfort in this admittedly often tiresome and difficult situation is that if the 50 Hz mains interference is properly eliminated, all other components of mains interference including non-phase-locked mains-borne interference from other sources will also be eliminated.

2.2.6 Application of the fore-going to operational amplifier circuits

To illustrate that what we have said so far has a wider applicability than to the interconnection of instruments into an electrical measurement system, we now discuss simple operational amplifier circuits.

For this purpose we will consider only an ideal operational amplifier as a 'black box' which, with the aid of some external feedback components,

contrives to maintain $V_I = 0$ between its two input terminals with negligible current flow into either of them, and

2) ensures that the input, and therefore by virtue of the feedback, the output, is not influenced by the magnitude of V+ or V-.

Actual operational amplifiers approach this ideal rather closely. A common application is the unsymmetrical amplifier circuit drawn in figure 13.

i is the total feedback current through R_F, and i_o is the total output current flowing through the load R_L. Because of the high voltage gain of the operational amplifier, the feedback operates so that $V_I \approx 0$ at all times. Therefore,

$$i = V_o/R_F \qquad \text{and } V_S + iR_I = 0$$

The voltage gain of the network is $V_o/V_S = -R_F/R_I$. Also,

$$i_o = V_o/R_L = (R_F/R_L)i.$$

Usually i_o is considerably greater than i. An example of some possible numerical values may help the situation to be more meaningful. For an amplifier having a voltage gain of 100, we might have $R_F = 10^5\ \Omega$, $R_I = 10^3\ \Omega$ and $R_L = 10^3\ \Omega$ so that $i_o = 100I$. If $V_S = 10$ mV, i = 10 μA and $i_o = 1$ mA.

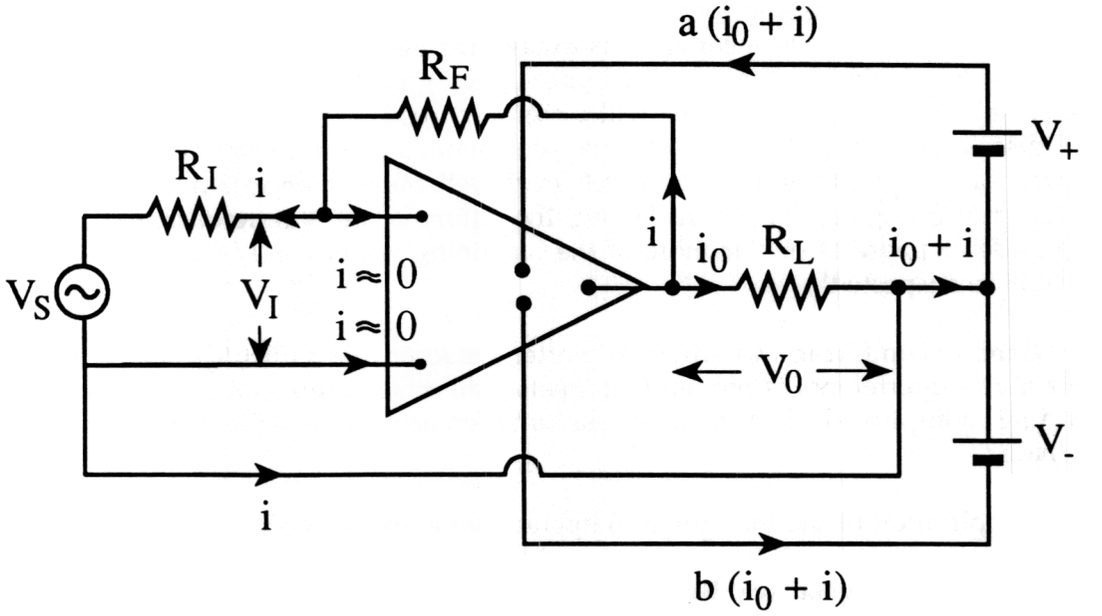

Figure 13 The currents flowing in an unsymmetrical amplifier circuit

Note that, in figure 13, the currents i and i_o complete their circuit through the power supplies, which supply fractions a and b of the total current, plus the currents (not shown) needed to operate the internal circuitry of the amplifier. Because i_o and therefore the output voltage across the load has been made immune by the design of the operational amplifier to variations in either supply voltage, it is therefore also highly immune to noise voltages in either supply and noise current i_n from any such source flows only around the supply loop.

This simple situation becomes much more complex when two amplifier circuits are connected in cascade and fed, as is usual, from the same supply rails. The circuit is drawn in figure 14. The feedback and output currents belonging to the first stage are in lower case characters, and those belonging to the second stage, in upper case.

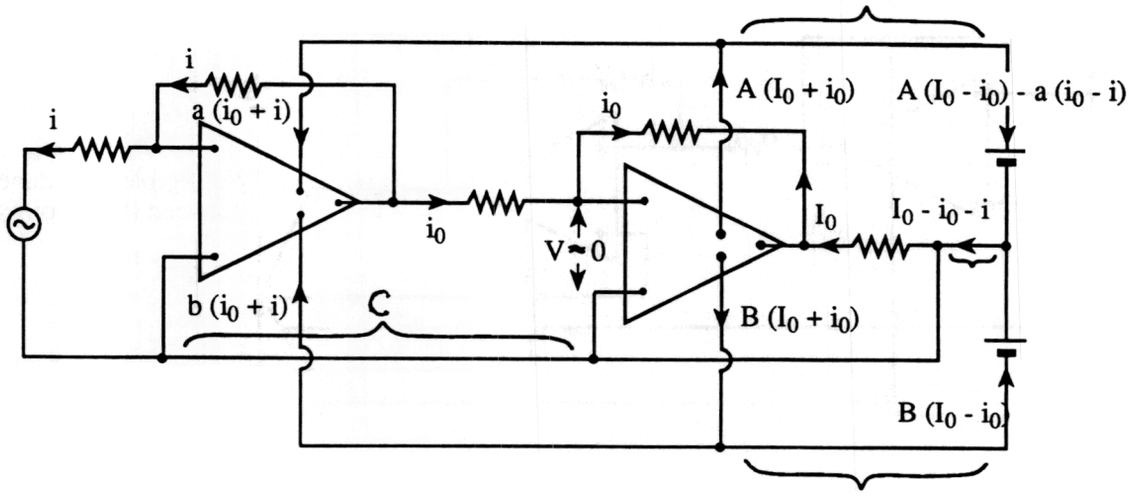

Figure 14 *The currents in a two-stage operation amplifier circuit with occurrences of common-conductor coupling indicated by braces*

Note that

1) common-conductor coupling at C provides additional input to the second operational amplifier, and

2) if the operational amplifiers are not, in fact, completely immune to changes in the supply voltages, common conductor coupling along the supply rails and current return conductor could cause problems. In severe cases, common-conductor coupling can give rise to feedback and oscillations in high-gain circuits.

Some of these difficulties are avoided if the circuit interconnections are remade as in figure 15. Star connections are used to avoid some common-conductor couplings and the differential input properties of both operational amplifiers are used to sense a remote voltage source. Other potential problems which might be introduced by these measures include couplings due to the voltage drops down the longer supply conductors, and mutual inductive couplings between any loops they form.

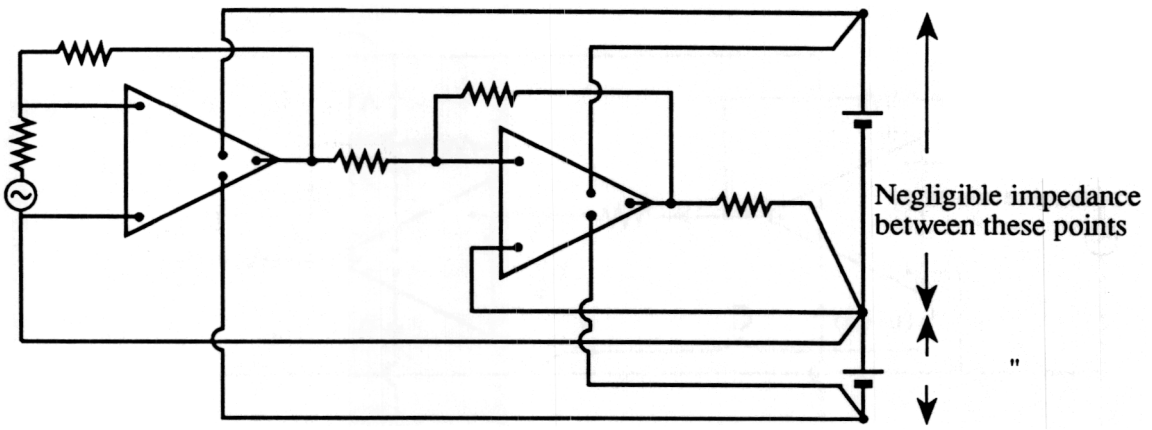

Figure 15 *Elimination of common-conductor coupling from the circuit of figure 14 by reconfiguring the conductors*

2.2.7 Inter-circuit capacitances on a printed circuit board

Some aspects of capacitances between various parts of a circuit, for example between conductors on the surface of a printed circuit board, are often misunderstood. The basic principles are illustrated in figure 16. The capacitance C_{12} between conducting surfaces 1 and 2 is modified by the presence of a third conducting surface. If surface 3 is maintained at a definite potential with respect to 1 and 2, C_{12} is decreased somewhat to, say, C'_{12}. This change is independent of the particular potential of 3, be it zero ('ground') potential or several kilovolts with respect to 1, 2 or any other nearby conducting surfaces. If the potential of 3 is indeterminate - that is if it is not connected to the circuitry which determines the potential of 1 and 2 - the current through C_{12} will be augmented by that through C_{13} and C_{23} in series.

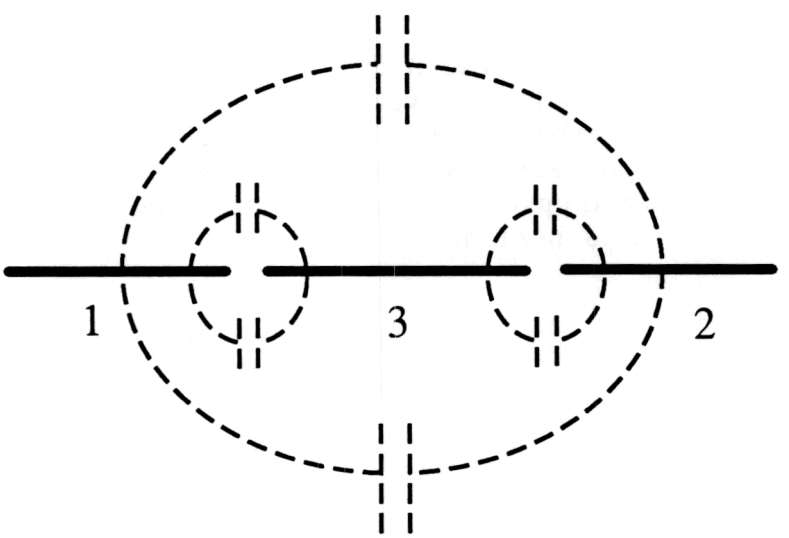

Figure 16 Capacitances between conductors on a printed-circuit board

We can apply these concepts to two conductors on a printed circuit board which is provided with a 'ground plane' in the intervening space between them, as in figure 16, or covering the whole of the reverse side of the board, as in figure 17. In either case, the direct capacitance between the two conductors is only approximately halved. In a circuit containing only impedances low compared with $1/(2\pi f C_{13})$ etc. the 'ground plane' has no rôle, but at higher frequencies f the potential divider formed by C'_{12} and either C_{23} or C_{13} may well be significant and useful.

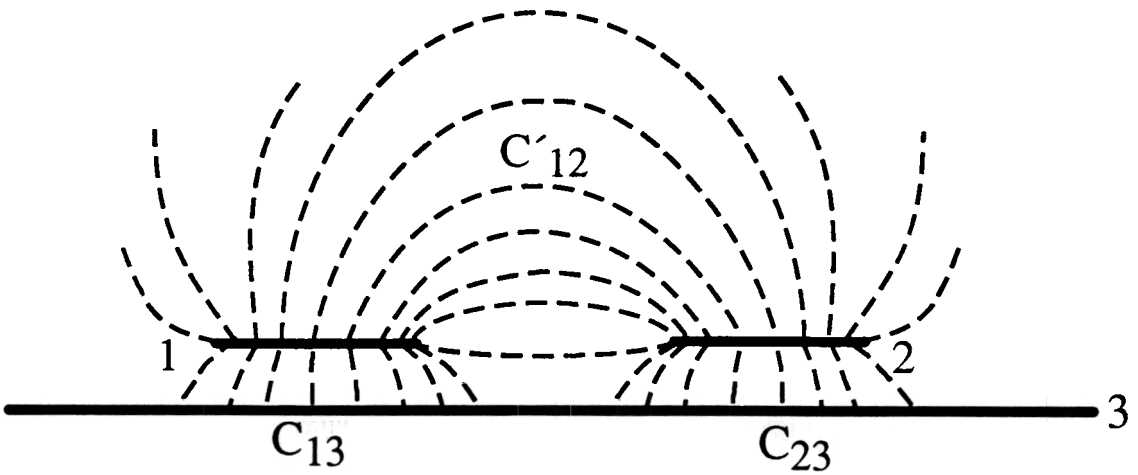

Figure 17 A 'ground plane' on the reverse side of a printed-circuit board

2.2.8 Useful diagnostic equipment

There are some devices which, when used in conjunction with a oscilloscope or spectrum analyser of the requisite bandwidth and sensitivity, are particularly useful in revealing the causes of interference problems.

Differential input pre-amplifier. This device should always be used as to a large extent it avoids the problem, already mentioned in section 2.2.5, of additional significant current paths with concomitant interference being introduced by the very act of connecting the diagnostic equipment itself. A properly-designed differential input is a three-terminal device, as illustrated in figure 18, which has the property of responding to a voltage input between terminals 1 and 2, whilst having a very much smaller response to voltages between terminals 1 or 2 and terminal 3. Therefore a true indication of circuit conditions will be given if terminals 1 and 2 are connected to the nodes of the circuit between which we want to examine the voltage. Now careful thought must be given, however, as to what to connect to terminal 3. If there is no other connection between the circuit and the test instrument, via for example the green/yellow safety conductor, terminal 3 should be connected to a point on the current return path of the circuit. If there is already a low impedance connection, terminal 3 should be left unconnected to avoid introducing an extra return current path. The existence or otherwise of a connection can quickly be determined by a resistance-measuring meter connected between a point on the current return path of the circuit and terminal 3.

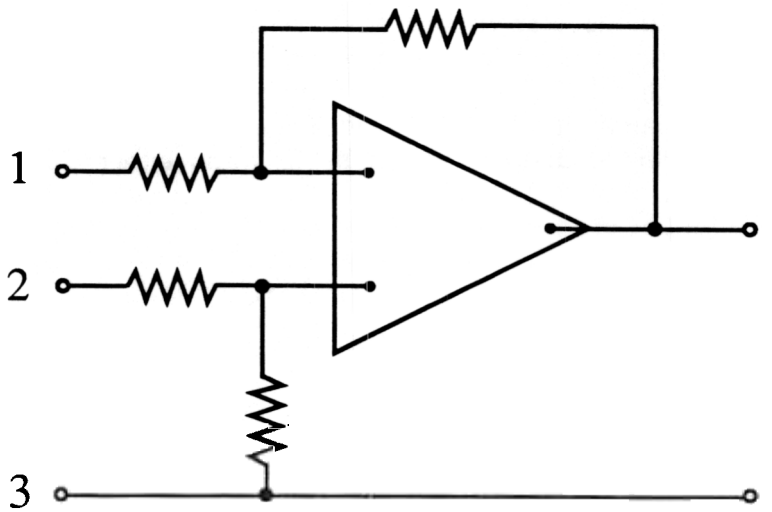

Figure 18 A differential-input preamplifier

A sensitive differential-input preamplifier correctly used in this manner can detect common-conductor problems by connecting inputs 1 and 2 to the two points on a conductor between which no potential difference is thought to exist.

Hook-around current probes. This almost indispensable device displays directly, with the aid of an oscilloscope, the current flowing in a conductor. A commercial version (see figure 19) has a high-permeability magnetic circuit which can be mechanically separated by sliding a portion of it aside, so that a conductor can be threaded through it without having to disconnect either end. In the magnetic circuit is a Hall effect device which detects the magnetic flux at DC and low frequencies. Its output is a measure of the current in the conductor which causes the flux. Additionally, there is a secondary winding on the core. This winding detects any AC in the conductor as a single-turn primary winding. This detection mode extends the frequency range to higher frequencies up to 1 MHz and beyond. The sensitivity of the device can be enhanced by winding several turns of the conductor to be examined through the core.

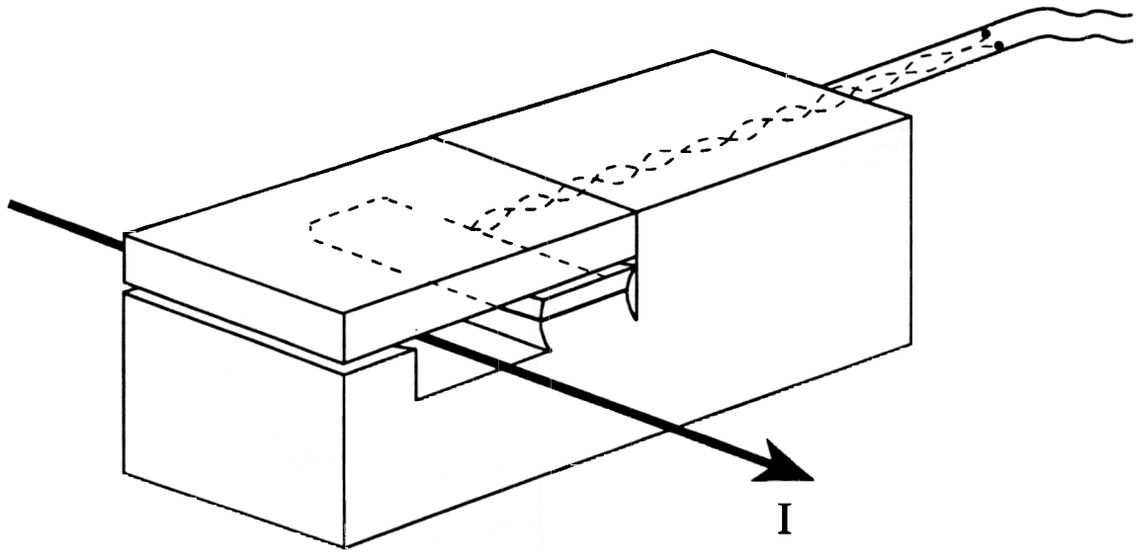

Figure 19 A 'wrap'around' current probe

Unfortunately, the commercial device is expensive but, if as is usually the case, only AC interference is being investigated and if one end of the conductor under investigation may be disconnected temporarily, it can be threaded one or more times through a complete toroidal magnetic core which has a secondary winding connected to an oscilloscope. Toroidal cores suitable for a range of frequencies are cheaply and readily available.

Current measurement of this kind can (and should) be applied to sensing whether the currents in a coaxial or twisted conductor-pair are truly balanced to be equal and opposite.

Pick-up coils for magnetic interference A short solenoid wound on a insulating former and covered with a conducting screen having an insulated overlap so that it does not constitute a shorted turn, as shown in figure 20, can be connected to an oscilloscope. It will give an induced voltage proportional to any AC magnetic flux threading it and can therefore reveal the presence of unwanted flux threading the circuit under examination. Steps can then be taken to eliminate the problem by one or more of the methods outlined in sections 2.2.4 and 3.

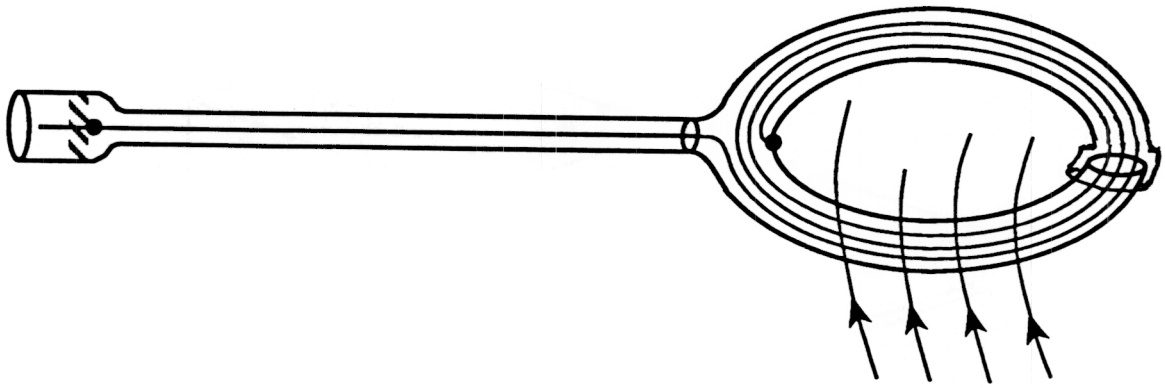

Figure 20 A pick-up coil for detecting magnetically-coupled interference

Capacitative probes. A capacitative probe is simply a sheet of conductor, preferably covered with an insulating layer to protect circuitry from short-circuits caused by accidental contact which is connected via a length of screened cable to the input of an oscilloscope or other detecting instrument. When handled by the screened cable with the handler connected also to the screen, and placed in the vicinity of the circuit under examination, it will reveal the presence of any unwanted electric fields which might be part of a capacitative current flow. Because of the high impedance nature of this useful device, it is somewhat harder to interpret the results obtained than those of a magnetic search coil.

3 PRACTICAL CONSIDERATIONS

In this section we address the problem of how, ab initio, to design measuring circuits to be immune to interference. If this approach is impracticable, there remains the harder problem of how to get the best results from invariably incorrectly designed commercial equipment.

3.1 THE PRINCIPLE OF AN ISOLATING ENCLOSURE WITH FILTERED OUTPUTS

By proper design it is possible to totally isolate a circuit so that it cannot communicate electrically with the world outside its screened boundary, except by the desired coupling to other like circuits or measuring instruments. This concept, which is central to interference rejection, can be appreciated by referring to figure 21. The circuit may well contain one or more noise sources and a filter must be used to short the output of these sources to the local screen of the circuit so that the noise currents are constrained to follow paths totally within the local screen. The circuit must either be constructed using the conductor-pair techniques of section 2.1.4, or the local screen must not allow magnetic as well as electric fields to penetrate it. The local screen is connected to the overall screen which isolates the measurement system as a whole from external electric fields at just one point A as shown. Similarly, the measurement shield may be connected to the green/yellow conductor of the mains for safety reasons at just one point B.

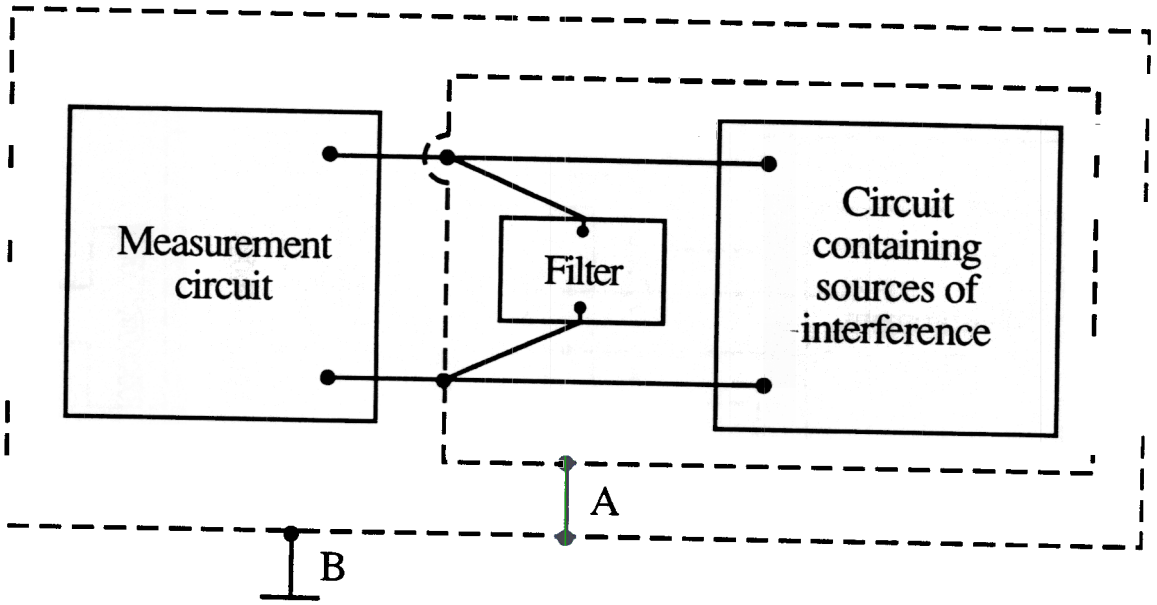

Figure 21 An isolating enclosure with a filtered output

The two examples which follow should help to make the application of this simple principle clearer.

Example 1. A totally isolated mains-driven DC power supply

This is illustrated in figure 22. The 'filter' consists of the storage capacitors and voltage regulation circuitry. These ensure that only a DC potential is allowed to exist between the output terminals. The transformer is uniformly wound on a toroidal magnetic core with an anti-progression turn to cancel the single-turn effect of the winding as it advances around the core. This transformer construction does not propagate its magnetic flux into the surroundings.

The two toroidal shields over the primary winding need to be constructed with their circumferential overlaps as shown in figure 23 which shows a cross-section through the axis of a toroidal core and nested shields. For perfect capacitative isolation, the cross-capacitances between them at their overlapping gaps, which are of the order of a few picofarads, need to be equalised with a trimmer capacitor put in parallel with the lesser. This adjustment can be carried out by connecting a highly-sensitive oscilloscope between the inner and outer shields and adjusting the capacitor for minimum observed 50 Hz signal.

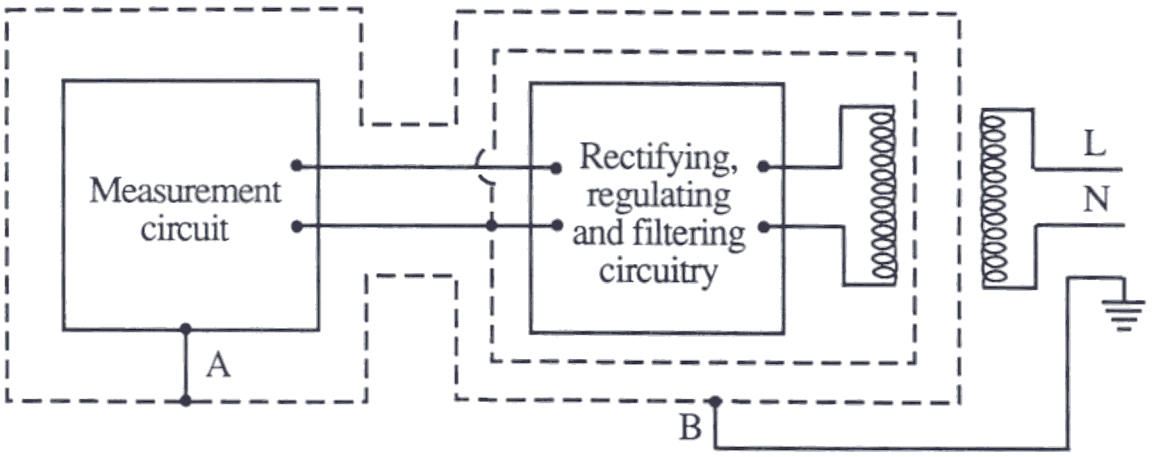

Figure 22 A totally-isolated mains-driven power supply

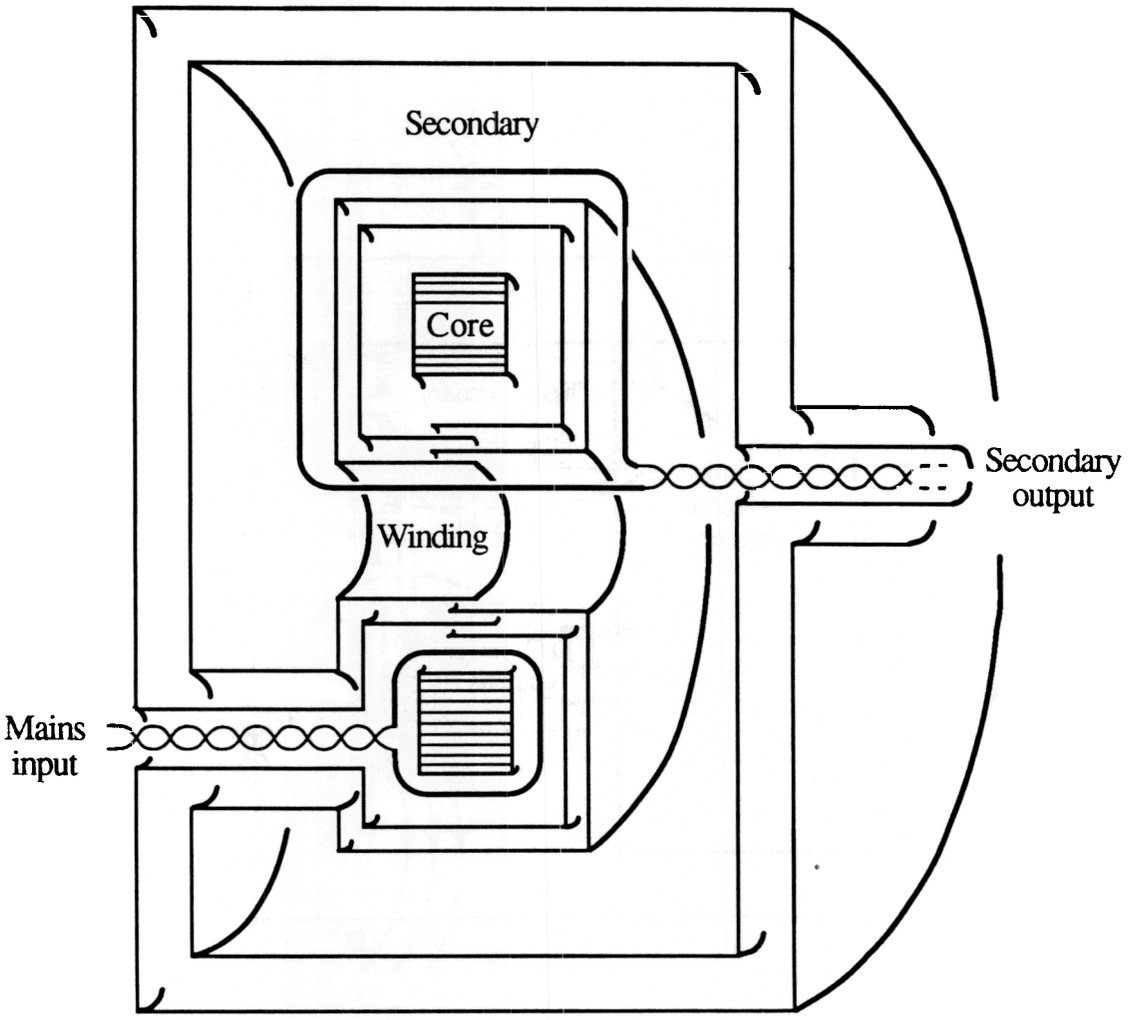

Figure 23 A cross-section through a toroidal transformer for a totally-isolated supply

The isolation of a supply constructed along these lines can be such that only a few picoamperes of current will flow at mains frequencies from the primary to the measurement system, and thence to the measurement shield and back to the primary.

Example 2. Isolating a noisy instrument

Many commercial instruments, as for example digital voltmeters, are insufficiently isolated from the mains by their internal power supplies. They often also generate noise from their internal digital and analogue workings which appears as noise sources between their input terminals and between these terminals and their case or internal shield. The instrument is designed to be sufficiently immune to this self-generated noise but the rest of the measurement system connected to it may well not be so. Figures for this noise are not

usually given in the manufacturers specifications. Possible noise sources and couplings in a typical instrument are illustrated in figure 24.

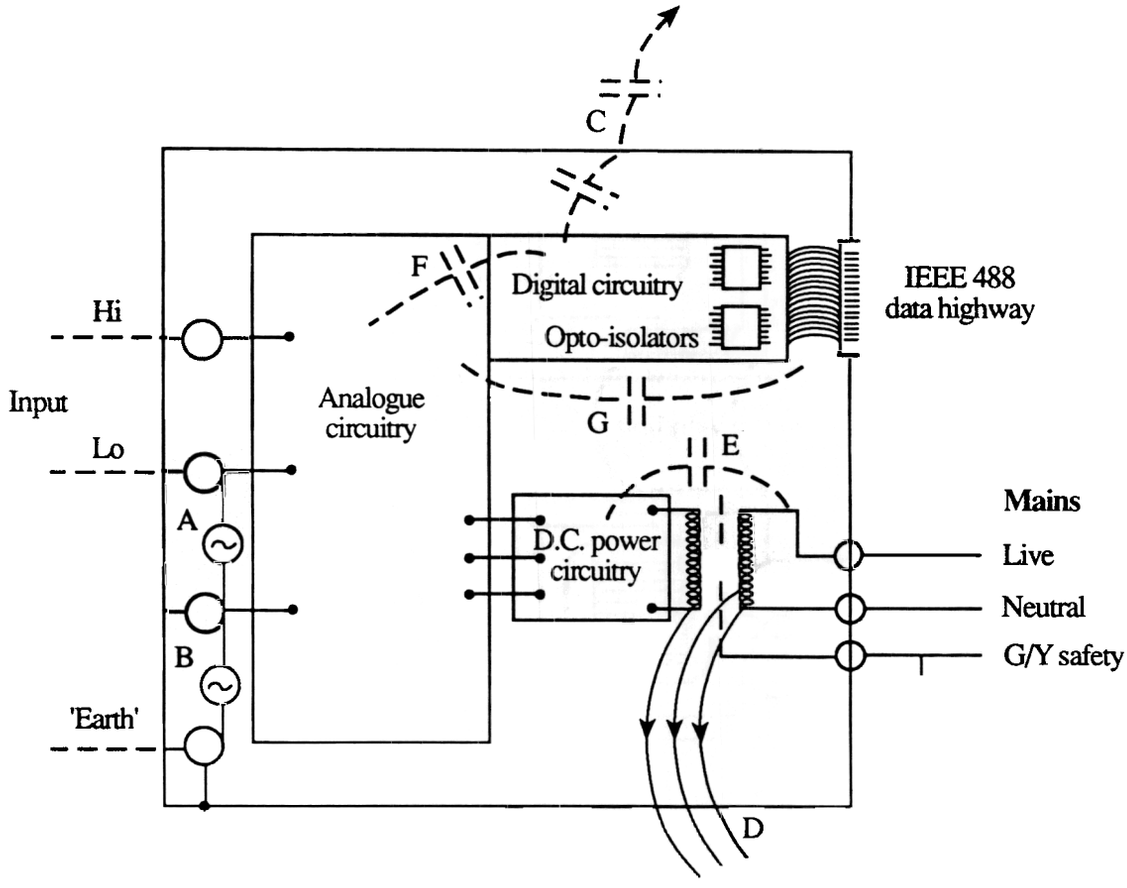

Figure 24 A typical commercial instrument as a noise source

The problem is amenable to the general approach given in this section, as illustrated in figure 25. A mains-voltage to mains-voltage isolation transformer must be constructed according to the method given in example 1, and the instrument needs to be placed in two nested shields, as shown. In practice, the conducting case of the instrument will be, or can be made, adequate to serve as the inner shield. Usually the most significant noise source is that between the 'low' input terminal and the instrument case or shield. Its effects can be confined to the interior of the inner shield by connecting this to the 'low' terminal. The noise source between the 'low' and 'high' input terminals may well be insignificant, so that the filter is unnecessary and degradation of the performance of the instrument can be avoided.

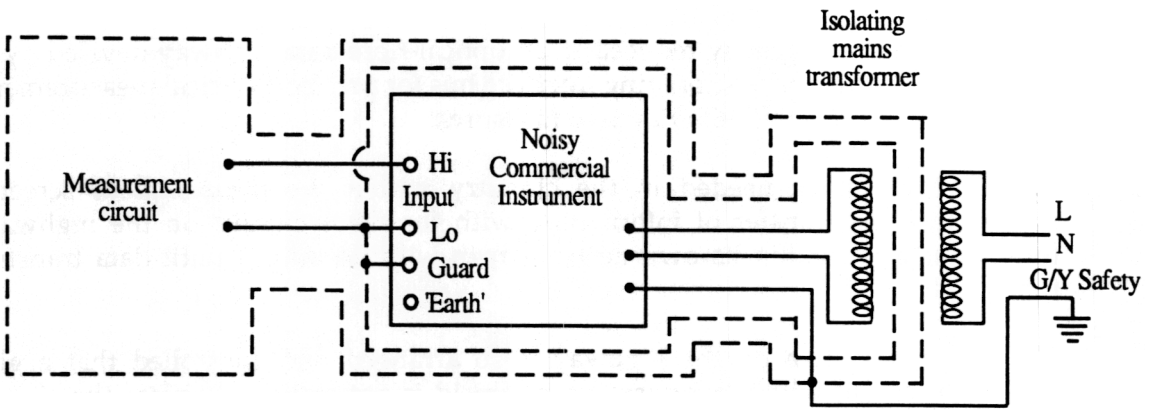

Figure 25 Isolating a noisy instrument

3.2 THE AVAILABLE METHODS FOR ISOLATING OUTPUTS

Sections 3.2.1 to 3.2.5 address the problem of replacing direct connections between circuits via conductors with indirect coupling methods involving negligible capacitance between the circuits. Common-conductor coupling, inductive coupling and with appropriate shields, capacitative coupling can be eliminated. Sections 3.2.6 and 3.2.7 deal with inductive coupling only and are therefore more applicable to low-impedance circuits where direct connections cannot easily be avoided.

Optical isolators

There are available many integrated-circuit packages whose internal circuitry is divided into two separated halves with information, usually digital, passed between them via light-emitting diodes in one circuit and light-sensitive receivers on the other circuit. The only direct electrical connection between the circuits is via the high insulation resistance of the substrate and package and the capacitance between the two circuits. Because of the small dimensions of the circuits this capacitance is only of the order of a picofarad. These opto-isolators are valuable, if not perfect, isolation devices. The circuit on the measurement side may produce unconfined interference of its own. To gain full benefit from the smallness of the capacitance between the circuits, the integrated-circuit package ought to be arranged to be threaded through a hole of minimal size in the measurement screen so that the plane of the screen coincides with the gap between the circuits. Otherwise, interference generated at high potential on the receiving side may be carried capacitatively to and from the measurement side. Unfortunately, these devices are rarely used with this degree of care.

Optical fibre data links

There are again several commercial examples of these devices where the light between the two isolating circuits is transmitted via optical fibres. Since the circuits can now be as far apart as desired, and the fibres are easily threaded though small holes in the measurement screen, capacitive coupling can easily be made completely negligible. But, in the commercial

versions, the circuit within the measurement screen can create interference as it generates and receives the light pulses from the other circuit.

This interference has been greatly reduced in an optical-fibre data highway devised by one of us (I.A. Robinson, "An optical-fibre ring interface bus for precise electrical measurements". Meas. Sci. Technol. 2 (1991) 949-656) by two measures.

1) The 20 MHz clock needed in the circuitry within the measurement screen to synchronise the transfer of information with the other circuits on the highway is totally enclosed within its own nested screen with no output until data transfer is requested.

2) The transfer of data on the highway is so arranged and controlled that a given outstation circuit within a measurement shield is not activated unless the circuitry within that shield is ready to report the results of a measurement. Therefore, it can often be arranged that the outstation is totally electrically quiet whilst the circuitry within its measurement shield that it reports on is actually making measurements.

3.2.3 Amplifiers to obtain the effect of isolation where a single-conductor connection carrying negligible current is permissible

Figure 26 is a diagram of a circuit whose input is a symmetrical pair of FET-input operational amplifiers coupled to an output operational amplifier. By choice of the resistance ratios R_2/R_1 and R_4/R_3, the voltage gain of the circuit can be made to have any desired value of less than, equal to, or unity. The circuit is differential, that is, the output voltage V_{oc} is the amplified difference voltage V_{ab} and contains no component of the 'common mode' voltages V_{ac} and V_{bc}. By using FET input operational amplifiers, the AC input currents and need be only a few picoamperes flowing through their high input impedance of about 1 pF in parallel with $10^{13}\Omega$ slope resistance. In addition, there will be the DC input bias currents of the devices, which will be a constant pA or so. The sum of these currents will flow back to the measurement circuit through the current-return connection CC, but will often be so small as not to perturb the measurement circuit significantly.

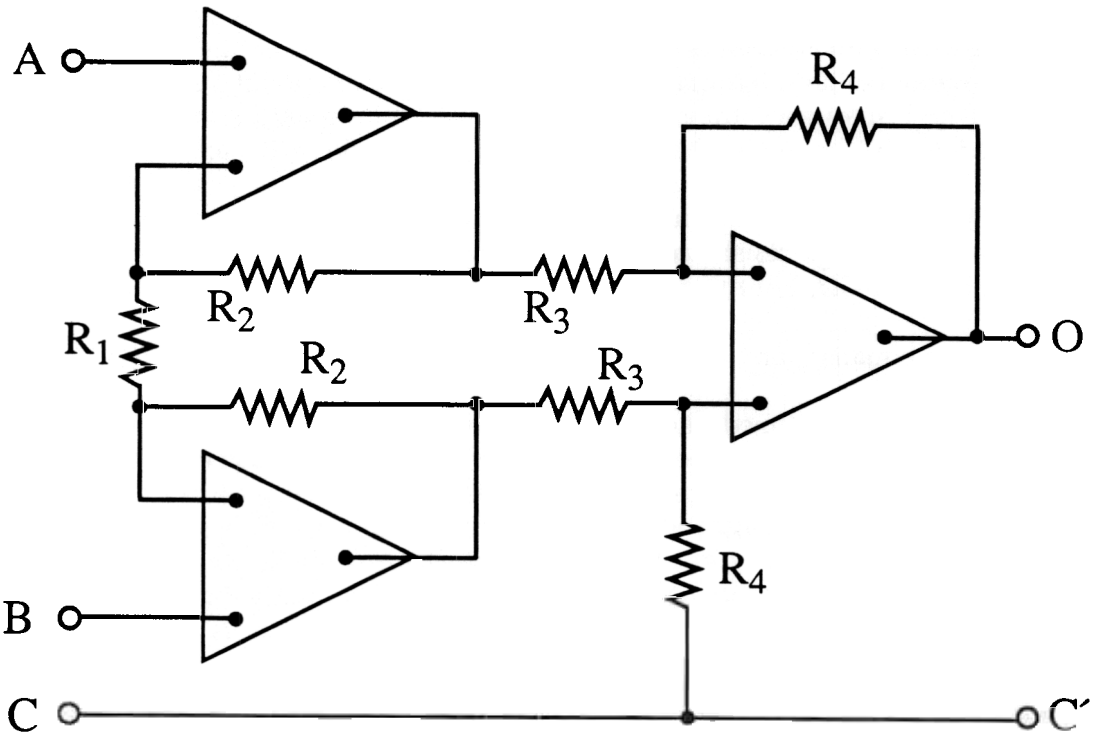

Figure 26 An isolation amplifier where one direct connection is permissible

Isolation amplifiers where no direct conducting connection is permissible

These perform the same function for analogue information as do opto-isolators for digital information. The circuitry within the measurement shield is based on a conventional operational amplifier. Its output is converted to a form suitable for reception by the circuitry outside the measurement shield without any direct electrical connections by conductors, using a variety of techniques including optical coupling, conversion of the information to a high frequency followed by transformer coupling or coupling via a capacitor of only a few pF. Similar feedback techniques across the isolation are used to ensure that the analogue signal voltages or currents in the measurement circuit transmitter are accurately reflected by those generated to match them in the receiving circuitry. As in the case of the optical fibre data link, the isolation of these devices is often designed to withstand voltages of a kilovolt or more between transmitter and receiver. The isolation is compromised only by the impedance between transmitter and receiver, which is typically a few pF in parallel with a few GΩ.

Supplying power to isolated circuits

Each of the isolation devices described in the above four sections requires power to be supplied to the circuit within the measurement shield in a manner which does not significantly degrade its isolation. Disposable or re-chargeable batteries contained entirely within the measurement shield can do this, but with the expense and inconvenience of replacing or re-charging them when exhausted. The isolated power supply described in section 3.1, example 1 was devised to fulfil this need, but there is a more economic solution

which may be adequate for the purpose provided by isolated DC-DC converters. These are similar to the isolation amplifiers of section 3.2.4 in that DC power outside the measurement shield is converted to high-frequency AC and conveyed to the circuit inside the measurement shield by a high-frequency transformer with physically separated windings. The AC is re-converted to DC power within the measurement shield, with any residual AC being filtered and returned to the measurement shield to prevent its passage back to the measuring circuit. The isolation is incomplete, being compromised by the winding-to-winding capacitance and leakage resistance of the transformer, which might amount to a few pF in parallel with a few GΩ, but this is often adequate in practice.

3.2.6 Current equalisation

This technique was developed in conjunction with the coaxial AC bridges used to compare impedances at the highest accuracy levels in standards work because it enables the electrical definition of the standards concerned to be complete. It also ensures that these bridge networks have negligible magnetic fields external to the coaxial cables and, by virtue of the reciprocity theorem that they are therefore immune to magnetically-coupled interference. This latter property concerns us here, and although the technique is not generally applied in interference elimination, it is worth understanding in case it is useful in particular circumstances.

Consider, as illustrated in figure 27a, just one mesh of a network of conductor-pairs (usually coaxial cable) the circuit of whose inner conductors incorporates a voltage source and a comparatively high impedance which sets the value of the current flowing around it. The circuit of the outer shield conductor has a low impedance. If the conductor as a whole is threaded through a high-permeability magnetic transformer core as shown, the mesh becomes a current transformer with the inner conductor as a high-impedance primary winding and the outer as a near short-circuit across which, to a good approximation, no voltage can be developed. The circuit is redrawn to illustrate this, in figure 27b. Hence there is only a very small residual flux in the core, and to produce this state, the primary and secondary currents must be nearly equal and opposite, so that the total current in the cable as a whole is nearly zero, as required. The effectiveness of the device can be greatly enhanced if the cable is threaded through the core a few times rather than just once. Thus the conditions of section 2.2.4 can be met for frequencies from 10 Hz to 1 MHz. If the circuit consists of several meshes, each one ought to be provided with one equaliser; it is irrelevant at which point around the mesh it equalises each equaliser is placed.

1) The circuit of one of the two conductors (the outer of coaxial cable conductors or one of a twisted-pair) must have an impedance low compared with the inductance of the wound equaliser.

2) The circuits of the two conductors must be nearly coincident in space, that is, the open area between them must be small.

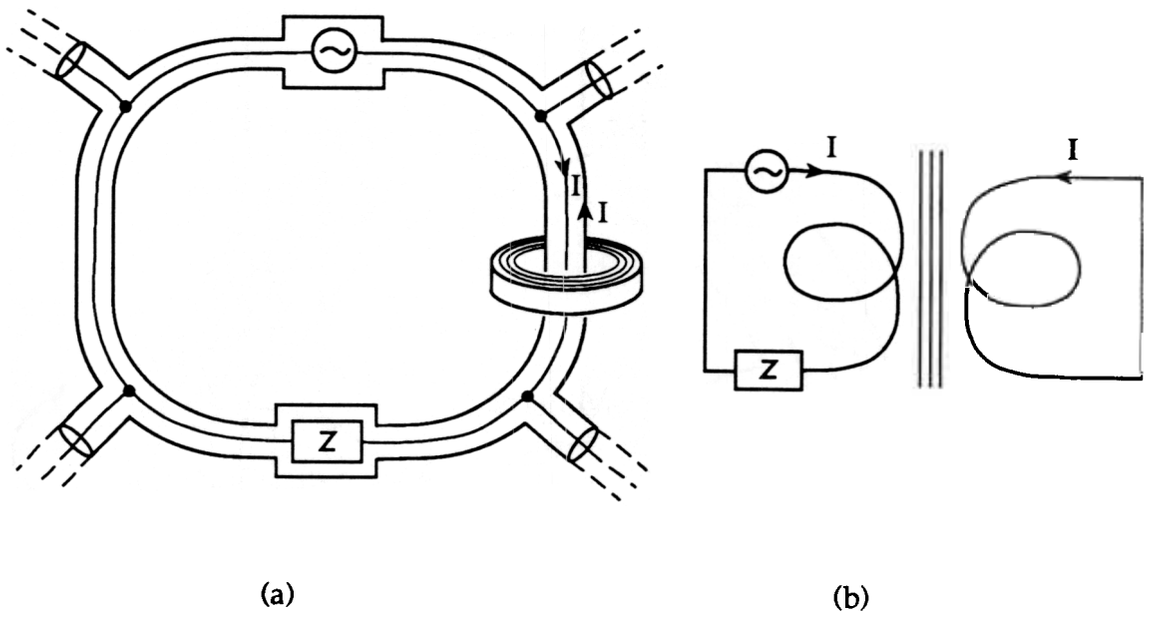

Figure 27 *A high-permeability (usually toroidal) transformer core used as a current equaliser*

3.2.7 Why 'earth loops' are bad, and what to do about them

In the literature on interference rejection, reference is often made to problems caused by 'earth loops'. This phrase means the accidental or deliberate provision of more than one current-returning path in the interconnections between circuits. Because these paths usually have a very low impedance, quite large interfering voltages can be propagated amongst the circuits by the common-conductor coupling discussed in section 2.2.1. These can be eliminated by removing unnecessary return conductors and making appropriate star connections amongst the rest. There is one other aspect of a 'loop' of this kind, which we can best illustrate by an example.

Consider the shielded, twisted conductor-pair circuit illustrated in figure 28. It might be supposed that, because there is no (or at most, only one) connection between the shield and the conductors it surrounds and hence no common-conductor coupling between them, the presence of any currents in the shield caused by an interfering source such as that drawn at the bottom of the diagram, would be irrelevant. Such currents however set up a magnetic flux threading the loop and this flux induces equal voltages in the two conductors of the pair. If the circuit differs in its response to these two voltages, interference will be coupled in.

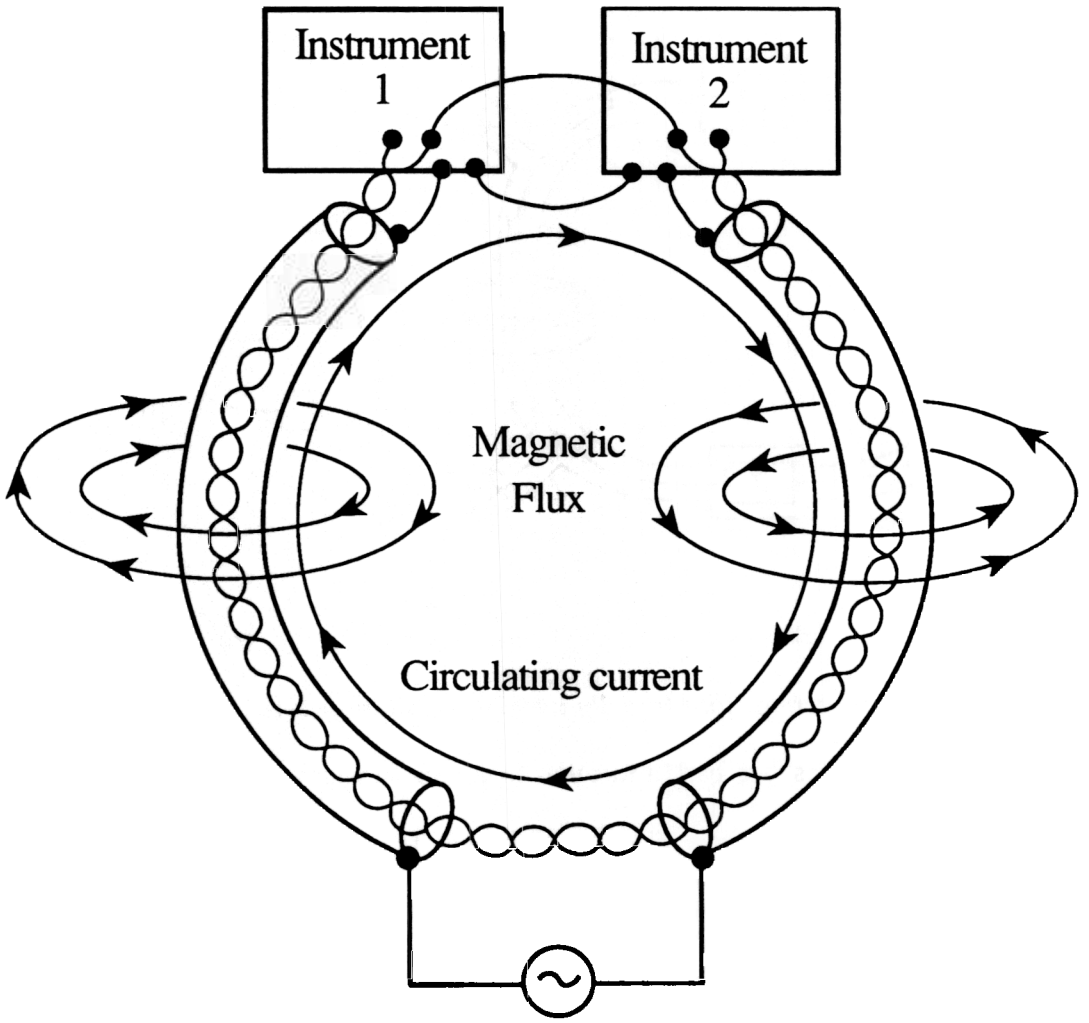

Figure 28 A loop in the shields of a circuit of twisted-pair conductors

To cure this problem, either the loop can be broken at an appropriate point, or, if this is not permitted because it forms a part of the safety conductor system, a small impedance of a few ohms inserted in an appropriate point in the loop may reduce the circulating current and the flux it generates to an acceptably low value. If it is inserted in a safety conductor, the impedance ought to be an inductor, rather than a resistor. The inductor should be so designed that in overload conditions, its magnetic core saturates and its impedance drops to permit passage of fuse-blowing current.

3.2.8 A 'worked example' - using a phase-sensitive detector

Consider for simplicity, using a phase-sensitive detector as a null-detector to detect the absence of a signal. Measuring a wanted signal involves exactly the same considerations, which then ensure that there is no unwanted component added to this signal. Phase-sensitive detectors pose a particular problem because they need an additional reference

input which must be phase-locked to the signal to be detected. Careless wiring causes coupling of this reference signal into the measurement input and this causes consequent erroneous results. Coupling could arise in the usual application where a signal source is used both to stimulate the measurement circuitry and provide the reference signal, as illustrated in figure 29. Currents at the source frequency circulate in the outer conductors of coaxial cables used to link the source, measurement circuit and detector and result in both mutual inductive and common-conductor coupling into the detector. The important point is that there should be no significant current in the inner or outer conductor of the coaxial cable connecting the measurement network to the signal input of the detector. A null indication of the detector presumably indicates that the current in the inner is zero. A simple test for the effect of any current in the outer is to insert a resistance temporarily in series with the outer conductor. Doing this, if all is well, should have no effect on the indication of the detector.

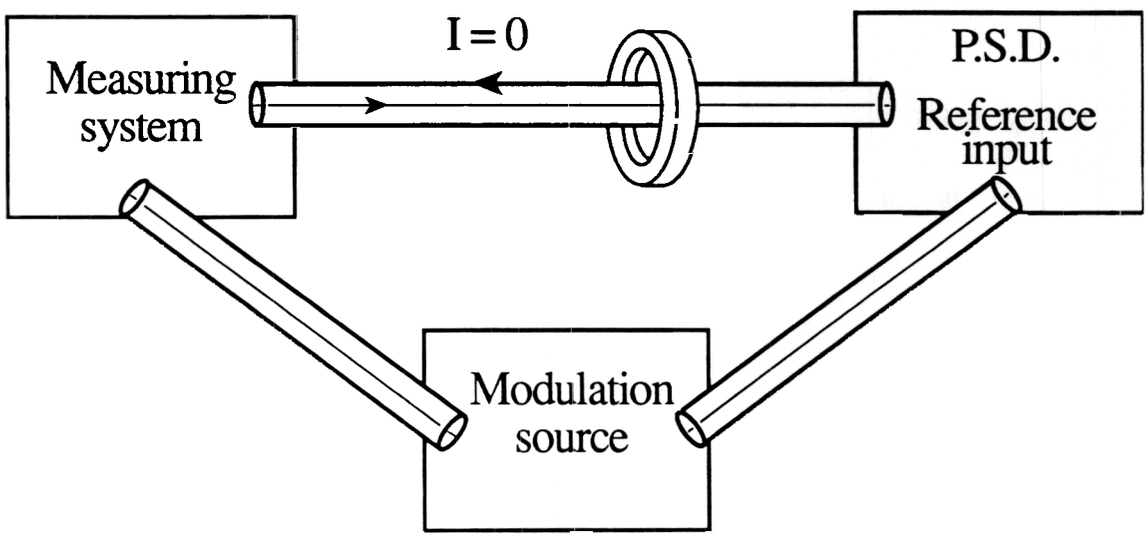

Figure 29 *a) A current equaliser reduces the loop current in the outer shielding conductor of the coaxial cables*

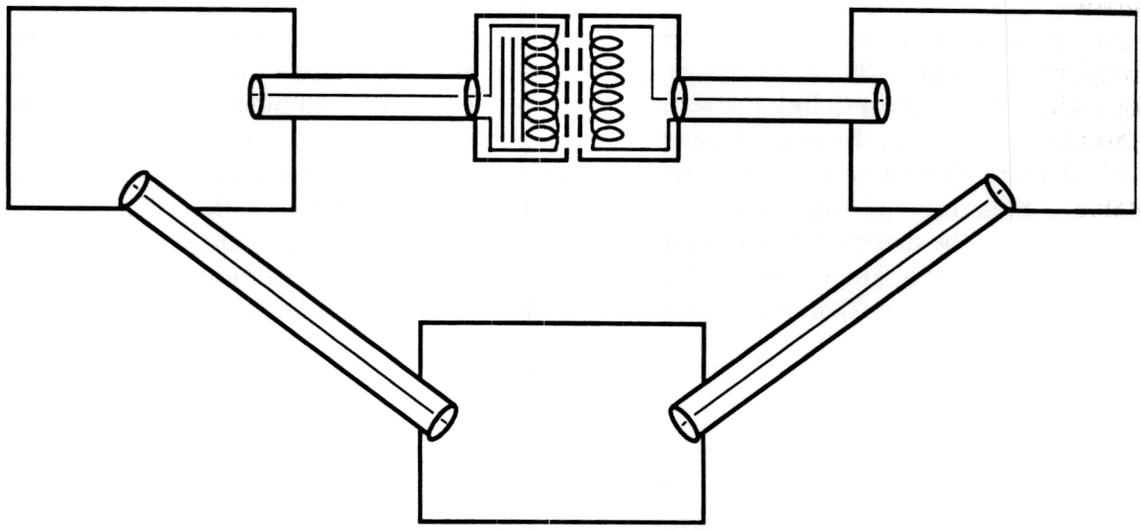

An isolating transformer breaks the loop

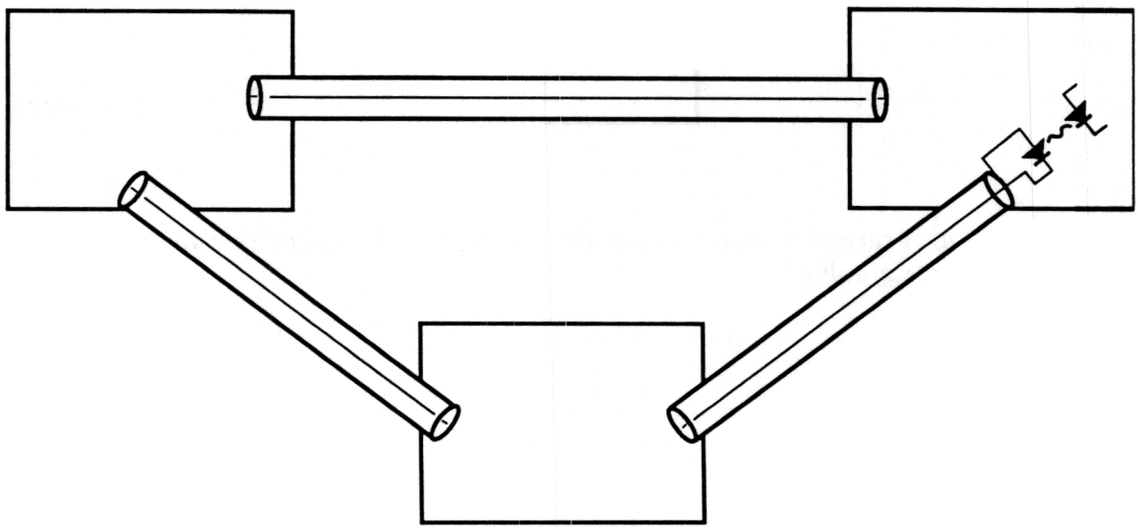

Opto-isolation breaks the loop

3.3 MINIMISING THE EFFECTS OF USING INCORRECTLY-DESIGNED COMMERCIAL INSTRUMENTS

Sections 3.1 and 3.2 above have been a counsel of perfection. Our experience is that in very particular circumstances, when systematic errors caused by the rectification of noise by measuring instruments (a common problem) are significant, or very noise-sensitive instrumentation is involved, the construction of the correctly-designed isolating systems described in these sections are very worthwhile, if not mandatory. An example of the compulsory use of these techniques is the automated operation of measuring systems involving a SQUID. (J.M. Williams and A. Hartland. An automated cryogenic current comparator resistance ratio bridge. IEEE Trans. IM40, 1991, 267-270.)

But these specialised transformers and supplies are not yet readily available and involve additional expense. By making use of the fundamental principles of section 2, we attempt in this section to suggest practical guidelines for getting the best interference-rejection performance from the usual commercial equipment. It must be realised that we can only give guidelines as there is no limit to the ingenuity of instrument designers to making things differently difficult. Each case must be considered separately, taking account of the fundamental principles. Because most commercial instruments are not correctly constructed according to the simple principles we have outlined, making a measurement circuit incorporating them becomes an exercise in damage limitation. Nevertheless, the simple general principles applied with a view to the relative importance of the effects which should be minimised, can usually achieve acceptable results in practice.

'Typical' instruments (all of which we will suppose are mains-powered) are:-

i) Power supplies.

ii) Signal sources, which could very well be viewed as AC power supplies.

iii) Low-level measuring instruments such as sensitive digital voltmeters, phase-sensitive detectors, pre-amplifiers and so on.

A diagrammatic representation of any of these can, for the present purpose, be drawn as in figure 24. The 'Hi' and 'Lo' input terminals may very well be the inner and outer connections made by a coaxial socket.

Some guidelines for obtaining the best performance from these imperfect instruments are:-

i) Eliminate common-conductor couplings in the external wiring. Remember that data highway cables plugged in later might violate a carefully thought-out circuit.

ii) Decide whether the circuit connected to the input of a low-level measuring instrument is of high or low impedance.

iii) The mutual-inductive coupling which causes problems in low-impedance circuits is perhaps easier to eliminate than capacitative coupling. Use impedance-transforming devices such as operational amplifiers having a low output impedance, or impedance-matching transformers or, maybe, isolation amplifiers to transform to

low-impedance interconnection networks. Then pay particular attention to eliminating outer-conductor loops. (See sections 3.2.6 and 3.2.7)

For the ultimate performance, the offending instrument must be put in a totally-enclosing Faraday cage and supplied via a specially-constructed mains-mains isolation transformer as described in section 3.1 example 2.

4 FINAL REMARKS

4.1 NON-ELECTRICAL INTERACTIONS

In the above, we have assumed that all coupling modes between circuits (interference) are electrical. In fact, significant energy can sometimes be coupled acoustically - that is, the interfering circuit can have some element which behaves like a loudspeaker, and the measuring circuit an element which behaves like a microphone. Examples of the former include mechanical movement of power transformer cores and conductors, vibration of cooling fans, piezo-electric elements and electric-field or mechanically induced movement of shielding conductors, and of the latter, acoustic modulation of the reluctance of matching and isolation transformer cores, triboelectric effect in dielectric insulators and capacitance modulation of shields. Coupling modes can often be identified simply by altering the damping of the emitter, transmitting medium or receiver by clamping or grasping in the hand, or by altering the disposition of components. Once identified, it is usually a simple matter to provide the necessary acoustic isolation by using non-microphonic cables for critical connections and acoustically lossy mountings for troublesome components.

4.1.1 Thermoelectric emfs

The combination of temperature gradients and circuits composed of differing conductors produces emfs in the microvolt range. These can cause errors when making low-level DC measurements, and if the temperature gradients are time-dependent, the consequent variation of thermoelectric voltage is a source of low-frequency noise.

In principle, the problem can be eliminated from low-level DC measurements by reversing the polarity of the source of the desired signal. If the measuring circuit is linear, only that part of the response due to the source will reverse. Taking half of the difference between the source 'forward' and source 'reversed' signals then eliminates unwanted signals from stable, non-reversing sources such as thermoelectric emfs. A similar result can often be obtained from the difference between the 'source forward' and 'source off' signals. If the source cannot be turned off or reversed rapidly, thermoelectric emfs must be minimised by reducing temperature gradients and ensuring that dissimilar materials are eliminated as much as possible from the circuit. Input terminals to instruments can be lagged to reduce temperature differences between them and to protect them from draughts, and copper-to-copper connections should be used elsewhere in the circuit.

For applications where reduction to thermal emfs to the nanovolt level is important, it may be necessary as well to use oxygen-free high purity copper, or materials with proven low-thermal emf with respect to it, everywhere in the circuit. The unstressed structure of the conductors must not be compromised by excessive stressing or work-hardening, for example

by bending or twisting. Temporary or permanent connections around the circuit need special attention. Switch contacts used for this kind of work should be made from special alloys, or silver- or gold-coated pure copper. If a rubbing action accompanies the act of making contact, several seconds may be needed for induced thermoelectric emfs to die away.

Soft-soldered joints need careful treatment. Ordinary tin-lead solder as used for electrical connections has a high thermoelectric emf with respect to copper. It can nevertheless be used if the pre-tinned copper conductors to be joined are brought into intimate contact by applying pressure whilst being soldered together. If there is no great excess of solder surrounding the resulting joint, thermoelectric effects will be minimal. This approach is, in our experience preferable to using 'low-thermal' solder containing cadmium as it is difficult to obtain an electrically or mechanically sound joint with this material. Pure copper crimped joints are a alternative to soldering as the stress in the metal is only localised.

Charged particles (cosmic rays etc)

These are mentioned more for the sake of completeness than for being a likely practical nuisance, although they can be significant in certain very high-impedance instrumentation, such as photomultipliers and electrometers. Shielding is usually impracticable, and elimination by suitable signal conditioning must be resorted to.

4.2 IT'S ALL A MATTER OF TOPOLOGY

After experience has been gained in putting into practice the principles expounded in this report, it will be realised that the correct design of an interference-free electrical measurement system is largely a matter of topology - that is, the correct arrangement of the connectivity of conductors and conducting surfaces, and the layout of magnetic circuits. The exact geometrical disposition of the system other than ensuring the contiguous paths of conductor-points should then be unimportant. Our experience is that there is one, and only one, correct topological arrangement of a circuit, and that the search for it is very worthwhile.

Look out for unwanted connections

It follows that only the minimum number of connections necessary to the functioning of a circuit should be made. In particular, the interconnection of everything in sight to 'earth' is a counsel of despair. Instead, one should draw a **complete** circuit diagram, remembering that the circuit which exists in reality may not correspond with the working circuit diagram in small, but vital, details. For example, there may be conducting or capacitative routes for currents through ostensibly non-electrical apparatus such as optical tables, pressure sensors and so on. Routes of this kind should be drawn explicitly on the circuit diagram and their effects considered.

Finally, think where the currents are circulating

- and imagine the effects of the resulting potential drops and electric and magnetic fields. There is really nothing more to it than this. Remember every interference phenomenon has a rational, if sometimes obscure, explanation, and be persistent. If we have helped a little towards thinking out a rational approach to the problem of interference, we will have accomplished our purpose. Good luck!